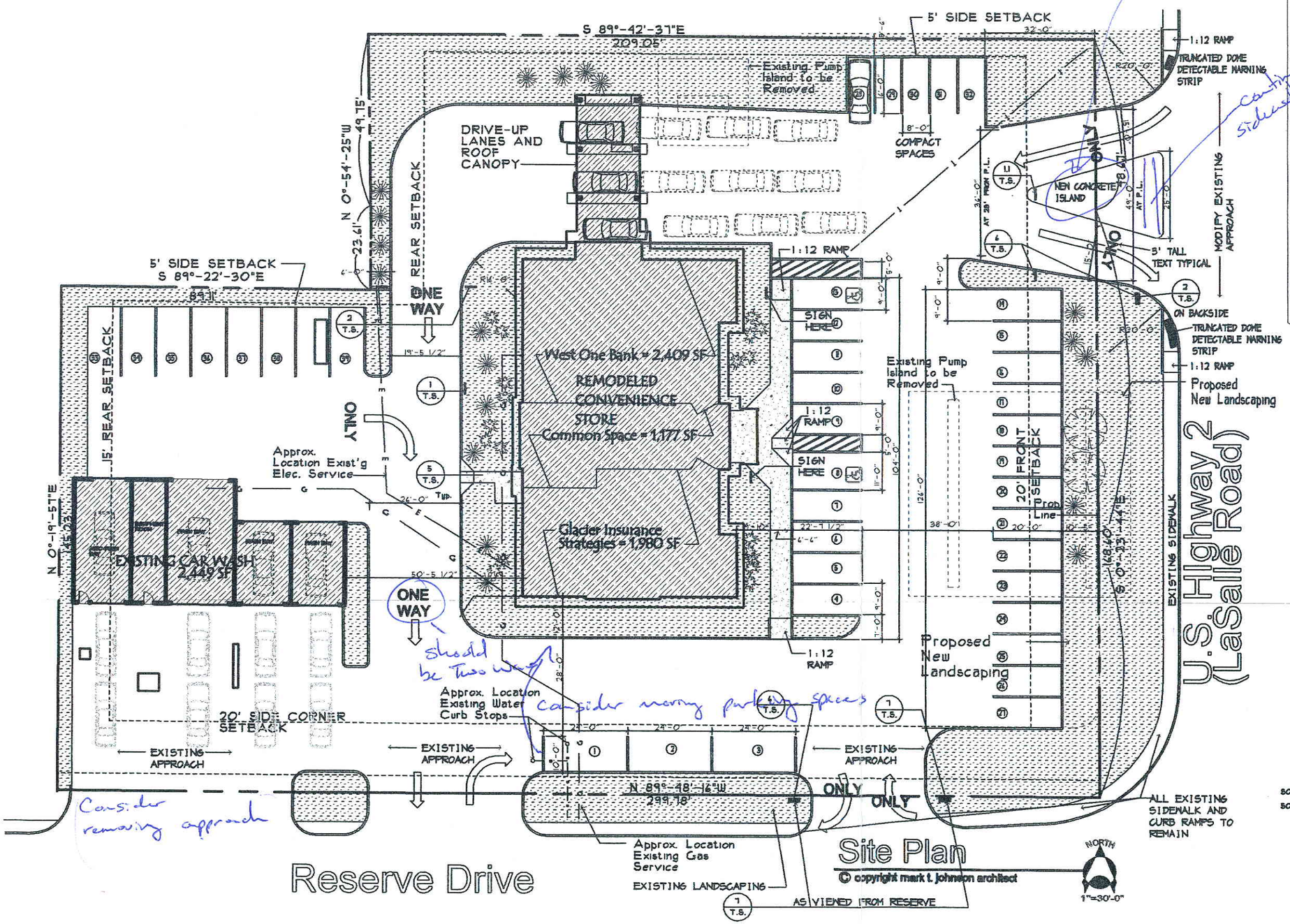


should be landscaped

continue sidewalk

should be two way

Consider moving parking spaces

Consider removing approach

## PROJECT INFORMATION

**OWNER:**
GLACIER WEST ONE, LLC
PO BOX 7758
KALISPELL, MT 59901

**ARCHITECT:**
MARK T. JOHNSON
680 STONE ST.
KALISPELL, MT 59901
(406) 756-0354
(406) 756-5592 FAX

**SITE INFORMATION**
**LEGAL DESCRIPTION:**

ASSR. NO. 0635631

SECTION 28
TOWNSHIP 29 NORTH, RANGE 21 WEST
P.M., M.,
FLATHEAD COUNTY, MONTANA

**SITE ADDRESS:**

2904 HIGHWAY 2 EAST
KALISPELL, MT 59901

**ZONING:**
ZONE:
B-2


MARK T. JOHNSON ARCHITECT, Ltd.

Mark T. Johnson
Architect
680 Stone St.
Kalispell, MT 59901
406-756-0354 office
406-756-5592 fax


Mark T. Johnson
License # 1778

PLANS ISSUED FOR:
- DESIGN REVIEW
- FINAL DESIGN
- PRICING
- CONSTRUCTION

PLANS NOT TO BE USED FOR CONSTRUCTION UNLESS MARKED FOR CONSTRUCTION


ALL COPYRIGHTS RESERVED. CONCEPTS CONTAINED WITHIN ARE THE SOLE PROPERTY OF MARK T. JOHNSON ARCHITECT, LTD. UNAUTHORIZED USE IS NOT PERMITTED


a conditional use permit for
Glacier West One, LLC
Kalispell, Montana

REVISIONS

| MARK | DATE |
|---|---|
| | |

CAUTION: THESE DRAWINGS MAY HAVE BEEN DISTORTED DURING REPRODUCTION. SCALING DRAWINGS MAY RESULT IN INCORRECT INFORMATION. PLEASE CONTACT THE ARCHITECT FOR ADDITIONAL INFORMATION.

01 March, 2010
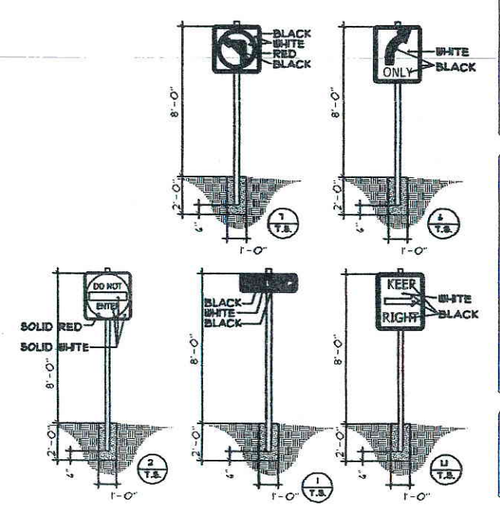
SHEET #